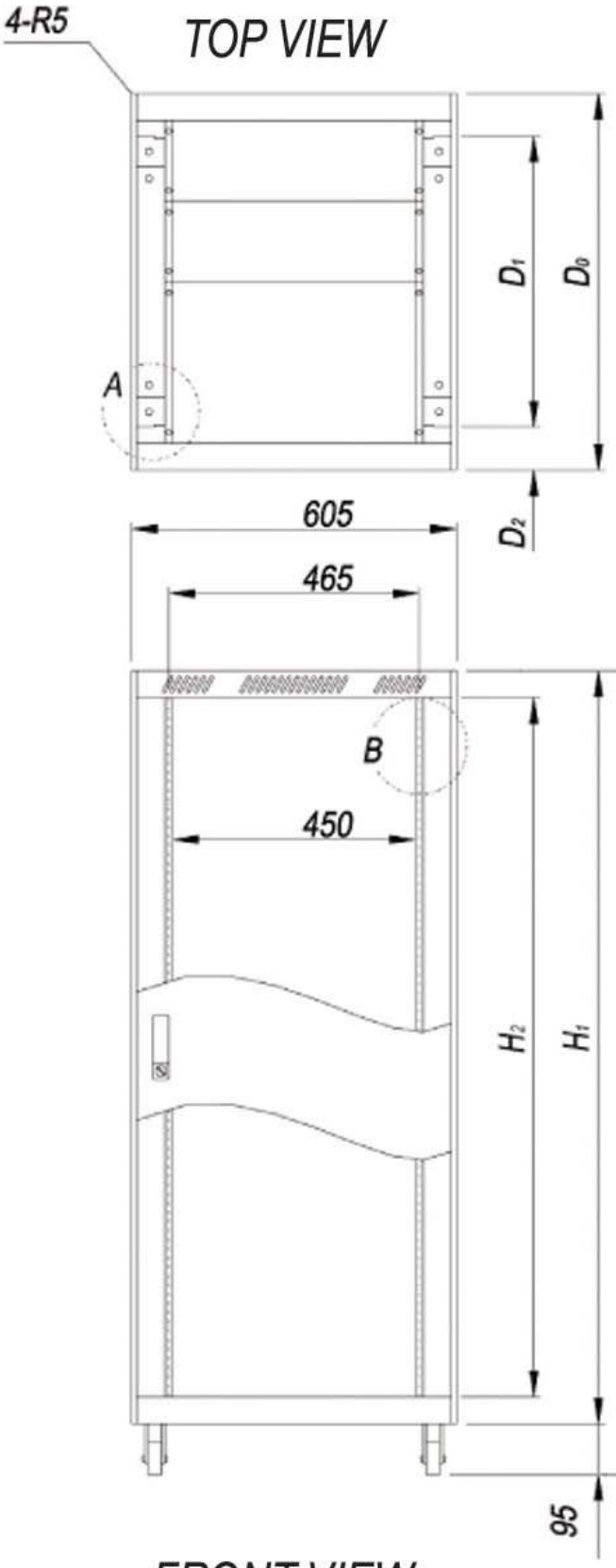
4-R5
TOP VIEW
A
D1
D0
D2
605
465
B
450
H2
H1
H0
95
FRONT VIEW

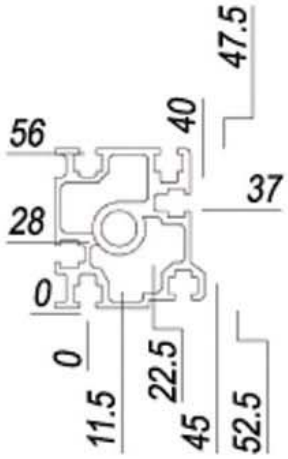
56
40
47.5
37
28
0
0
11.5
22.5
45
52.5
A部詳視

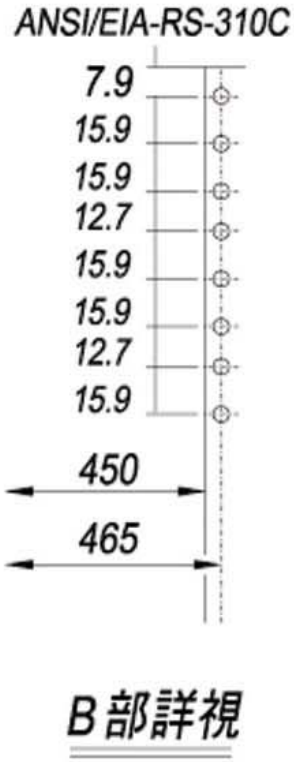
ANSI/EIA-RS-310C
7.9
15.9
15.9
12.7
15.9
15.9
12.7
15.9
450
465
B部詳視

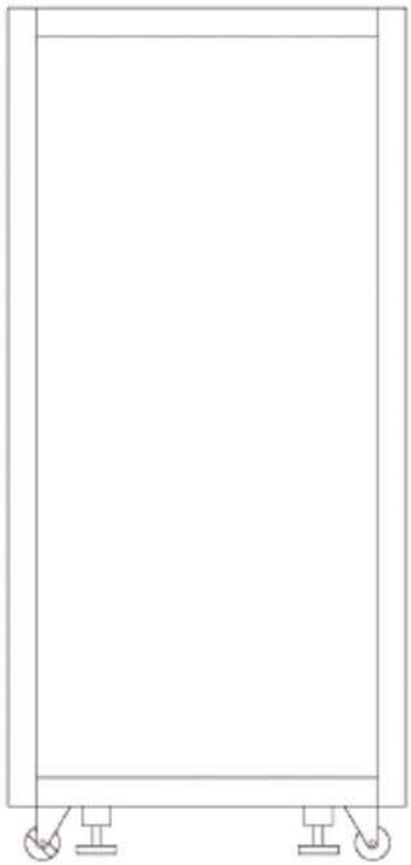
SIDE VIEW